IMPORTANT NOTICE: A printed copy of this document may not be the version currently in effect. The current official version is available via the Sandia National Laboratories Nuclear Waste Management Online Documents web site.

SANDIA NATIONAL LABORATORIES
CHEMICAL & DISPOSAL ROOM PROCESSES DEPARTMENT 6748
WASTE ISOLATION PILOT PLANT PROJECT

TOP-550

CALIBRATION, USE, AND MAINTENANCE OF THE SEQUOIA-TURNER MODEL 450 DIGITAL FLUOROMETER

Revision 0

Effective Date: 1/17/96

	Print	Signature	Date
Author:	W. Graham Yelton	W. Graham Yelton	1/17/96
Technical Reviewer:	John W. Kelly	John W. Kelly	1/17/96
PI Approval:	Hans W. Papenguth	Hans W. Papenguth	1/22/96
QA Approval:	Vic Weiss	Vic Weiss	1-26-96
Records Center Approval:	Peggy J. Warner	Peggy J Warner	1/31/96

1.0 REVISION HISTORY

This is a new document.

2.0 PURPOSE

This procedure provides for the calibration, operation, maintenance of the Sequoia-Turner Model 450 Digital Fluorometer as part of the laboratory geochemistry research activities in support of the Waste Isolation Pilot Plant (WIPP) Project.

3.0 SCOPE

This procedure is applicable only for the Sequoia-Turner Model 450 Fluorometer.

This document is not meant to substitute for the manufacturer's instruction manual for the Model 450 Fluorometer. The user is responsible for reading and understanding the manual (see references).

4.0 SAFETY

This document does not address ES&H issues. Laboratory ES&H procedures described in the SOPs of the laboratory in which the equipment is used shall be adhered to.

5.0 RESPONSIBILITIES

The Principal Investigator (PI), or designee, whose activities warrant the use of this procedure is responsible for implementing the requirements of this procedure.

The Project Scientist (PS), or designee, is responsible for performing the calibrations and measurements following the requirements of this procedure, documenting calibrations, and assuring that the latest revision of this document is followed.

The Quality Assurance Manager (QA Manager) is responsible for monitoring the work to assure proper implementation of the procedure and for assuring its continued effectiveness.

6.0 CONTROLS

Controls are established by written procedures or instructions prepared in accordance with QAP 5.3, PREPARING, REVIEWING, AND APPROVING TECHNICAL OPERATING PROCEDURES (Revision 1, effective date: 7/31/95) of the Sandia National Laboratories WIPP Quality Assurance Program. Procedures are issued in accordance with QAP 6.1, DOCUMENT CONTROL SYSTEM (Revision 1, effective date: 7/31/95) of the Sandia National Laboratories WIPP Quality Assurance Program.

6.1 STANDARDS

Calibration will be verified using commercially obtained reagents-grade chemicals or even spectro-quality recognized standards. The lot numbers and expiration dates (if any) of the standards used shall be recorded in the laboratory notebook.

The standards will not be used past the expiration date listed on the container by the manufacturer.

6.2 FREQUENCY

The instrument will be recalibrated upon failure of a performance test.

The instrument's calibration shall be verified with performance tests immediately prior to and immediately after use.

6.3 PERFORMANCE TEST CRITERIA

Performance tests will be done by measuring a blank sample of the appropriate media, this should read zero fluorescence. Then the fluorescence of the calibrating standard (see Section 7.0) is measured. If the difference between the calibrated lower and upper set points of the blank and the known calibration standard is greater than 5% of either the lower or upper limited of the measurement range, the instrument shall be recalibrated.

6.4 SAMPLE PREPARATION

Samples will be stored in borosilicate glassware or polyethylene . Test tubes or flasks may be capped with polyethylene or parafilm for short term storage (over night). Samples in contact with plasticizers in some plastic or rubber may develop high fluorescence and should be avoided.

Temperature of the standards, reagent blanks, and samples should be the same. This is necessary to avoid the sensitivity some fluorescent materials have to temperature changes.

6.5 WAVELENGTH/APERTURE SELECTION

The wavelength/aperture selection is accomplished with interchangeable, externally inserted filters. The selection of the proper filters/aperture set will be performed as per instruction in section 3-5 of the operator's manual (see Appendix 1).

7.0 CALIBRATION

The instrument shall be recalibrated if it fails a performance test. The calibration of the SEQUOIA-TURNER Model 450 Digital Fluorometer shall be performed as specified in sections 3-2 of the operator's manual (see pages 3-1 through 3-3 of Appendix 1).

7.1 CORRECTIVE ACTION

A performance test will be done immediately after calibration. If the instrument still fails, maintenance will be done (see section 4 and 5 of Appendix 1). If, following maintenance and troubleshooting, the instrument still fails its performance test, it shall be tagged and placed out of service and the manufacturer (SEQUOIA-TURNER CORPORATION) shall be contacted to initiate repair.

Failures of performance tests and the remedial action taken shall be documented on the analysis printout. Failures of more than one performance test in a given day shall be documented in the appropriate scientific notebook.

8.0 PROCEDURE: FLUORESCENCE MEASUREMENTS

The sample(s) should be analyzed immediately after collected.

Analyses will be performed as per instructions in the operator's manual. The instructions listed in section 3 of the operator's manual (see pages 3.1 through 3.5 of Appendix 1) will suffice for standard fluorescence analysis.

9.0 MAINTENANCE

Maintenance and troubleshooting will be performed on the instrument as instructed in the operator's manual (see Appendix 1).

10.0 QA RECORDS

The performance test results (including the lot numbers of the standards used), and all sample analysis results will be recorded in the laboratory notebook in accordance with Sandia National Laboratories WIPP Quality Assurance Program Procedure 20-2, "PREPARING, REVIEWING, AND APPROVING SCIENTIFIC NOTEBOOKS" (Revision 1, effective date: 7/31/95).

11.0 REFERENCES

Sequoia-Turner Corporation, 1987, *Operator's Reference Manual Model 450 Digital Fluorometer,* Sequoia-Turner Corporation

QAP 5.3, PREPARING, REVIEWING, AND APPROVING TECHNICAL OPERATING PROCEDURES (Revision 1, effective date: 7/31/95)

QAP 6.1, DOCUMENT CONTROL SYSTEM (Revision 1, effective date: 7/31/95)

QAP 20.2, PREPARING, REVIEWING, AND APPROVING SCIENTIFIC NOTEBOOKS (Revision 1, effective date 7/31/95)

APPENDIX 1

Operator's Reference Manual Model 450 Digital Fluorometer

Operator's Reference Manual

Model 450 Digital Fluorometer

Turner # 45F00-01 REV: C Sept, 1987

PRODUCT WARRANTY

Your SEQUOIA-TURNER Model 450 Digital Fluorometer is guaranteed to be free of defects in workmanship and materials under normal use for a period of one year from the date of purchase to the consumer.

The liability of SEQUOIA-TURNER CORPORATION is limited to repair or replacement and in no event shall SEQUOIA-TURNER be liable for any collateral or consequential damages or loss.

Instruments subjected to misuse, abuse, neglect or unauthorized repair or modifications will be excluded from this warranty.

This guarantee specifically excludes expendables and consumables.

All warranty claims must be directed to the SEQUOIA-TURNER CORPORATION distributor responsible for the sale of the instrument.

TABLE OF CONTENTS

SECTION 1 GENERAL SYSTEM INTRODUCTION

1-1 System Description
1-2 Specifications

SECTION 2 INSTALLATION

2-1 Standard Equipment
2-2 Instrument Checkout
2-3 Installation

SECTION 3 OPERATION

3-1 Description
3-2 Operation
3-3 Analog Output
3-4 Cuvette Selection
3-5 Filter Selection

SECTION 4 PREVENTIVE MAINTENANCE

4-1 General
4-2 Fuse Replacement
4-3 Cover Removal
4-4 Lamp Replacement
4-5 Voltage Selection

SECTION 5 TROUBLESHOOTING

5-1 General
5-2 Troubleshooting

APPENDIX

A Limitations
B Theory of Fluorescence

SECTION 1

GENERAL SYSTEM INTRODUCTION

1-1 SYSTEM DESCRIPTION

The Model 450 Digital Fluorometer is a high sensitivity instrument utilizing integrated circuit analog and digital signal processing. Excitation energy is provided by a quartz-halogen lamp and detection is by an high gain, low noise photomultiplier. Wavelength selection is accomplished by interchangeable filters.

Only three operator controls make the 450 one of the simplest fluorometers in the world to use. A large 3 1/2 digit LED display provides easy readability to minimize errors. It's so easy, the Model 450 requires virtually no training time.

1-2 SPECIFICATONS

† Readout - Seven segment, 3 1/2 digits, Light emitting diode display.

† Wavelength Range - 350-650nm (extendable to 750nm with red sensitive PMT)

† Wavelength Selection - interchangeable, externally inserted filters

† Sensitivity - 100 picograms FITC, 15 parts per trillion QSO_4

† Concentration Range - 0 to 1999

† Resolution - 0.05% of full scale

† Fluorometric Linearity - typically within 1%

† Detector - Photomultiplier tube

† Standard sample holder - accommodates 12 x 75 mm round cuvettes

† Outputs - 0-200 mVDC linear with fluorescence

† Temperature range - Operating 10° to 38°C, Storage 0° to 75°C

† Humidity - < 95%

† Power requirements - 100, 120, 220, 240 VAC, 50/60 Hz, 75 watts

† Dimensions - width-39cm (15 3/8") X depth-29 cm (11 1/2") X height-13 cm (4 1/2")

† Shipping Weight - 7.3Kg (16 lb.)

SECTION 2

INSTALLATION

2-1 Standard Equipment

The **SEQUOIA-TURNER MODEL 450 DIGITAL FLUOROMETER** consists of the following:

1 - Model 450-000 Digital Fluorometer
1 - Power Cord
1 - excitation filter
1 - emission filter
3 - 12 x 75 mm cuvettes
1 - 1/16" Allen Wrench
1 - 2.0 Amp Fuse (for 100 and 120 VAC use only)
1 - 1.0 Amp Fuse (for 220 and 240 VAC use only)
4 - Aperture slides
1 - 450-001 Operation Manual

2-2 Instrument Checkout

After the 450 is unpacked, inspect it for physical damage. Report any observed damage immediately to the Freight Carrier and your dealer.

2-3 Installation

A. The 450 requires either 100, 120, 220 or 240 VAC at 50 Hz or 60 Hz from a properly wired and grounded, single phase power outlet. The 450 is delivered preset to 120 VAC. Verify which voltage is present and set the voltage selection board on the back panel (see FIG 2-1) to the appropriate setting as follows:

1. Locate power inlet connector on back panel.

2. Be sure the power cord is not installed and slide the plastic protective cover to the left exposing the voltage selector board. If the voltage shown is incorrect, pull back the black fuse lever to remove the fuse and remove the board by pulling it firmly with a set of small pliers.

3. Turn the board until the proper voltage is facing you and reinsert the board. The proper voltage is now visible from the rear of the instrument.

4. Insert the proper fuse for the voltage selected.

   * For 100 and 120 VAC use 2.0 Amp fuse. (installed)
   * For 220 and 240 VAC use 1.0 Amp fuse. (included in accessories)

CAUTION

Two spare fuses are provided with the instrument, 1.0 Amp and 2.0 Amp. In addition, the instrument comes with a 2.0 Amp fuse installed for 100 and 120 VAC operation. In areas where 220 and 240 VAC are used, the installed fuse and the spare 2.0 Amp fuse should be discarded and replaced with the 1.0 Amp fuse.

5. Slide the cover to the right.

B. Locate the instrument on a vibration-free laboratory surface. Allow two inches behind panel for air circulaton and power cord.

C. Connect the power cord to instrument and to the proper outlet after verifying that the voltage of the instrument has been properly set.

D. Refer to Section 3 for operational details of the 450.

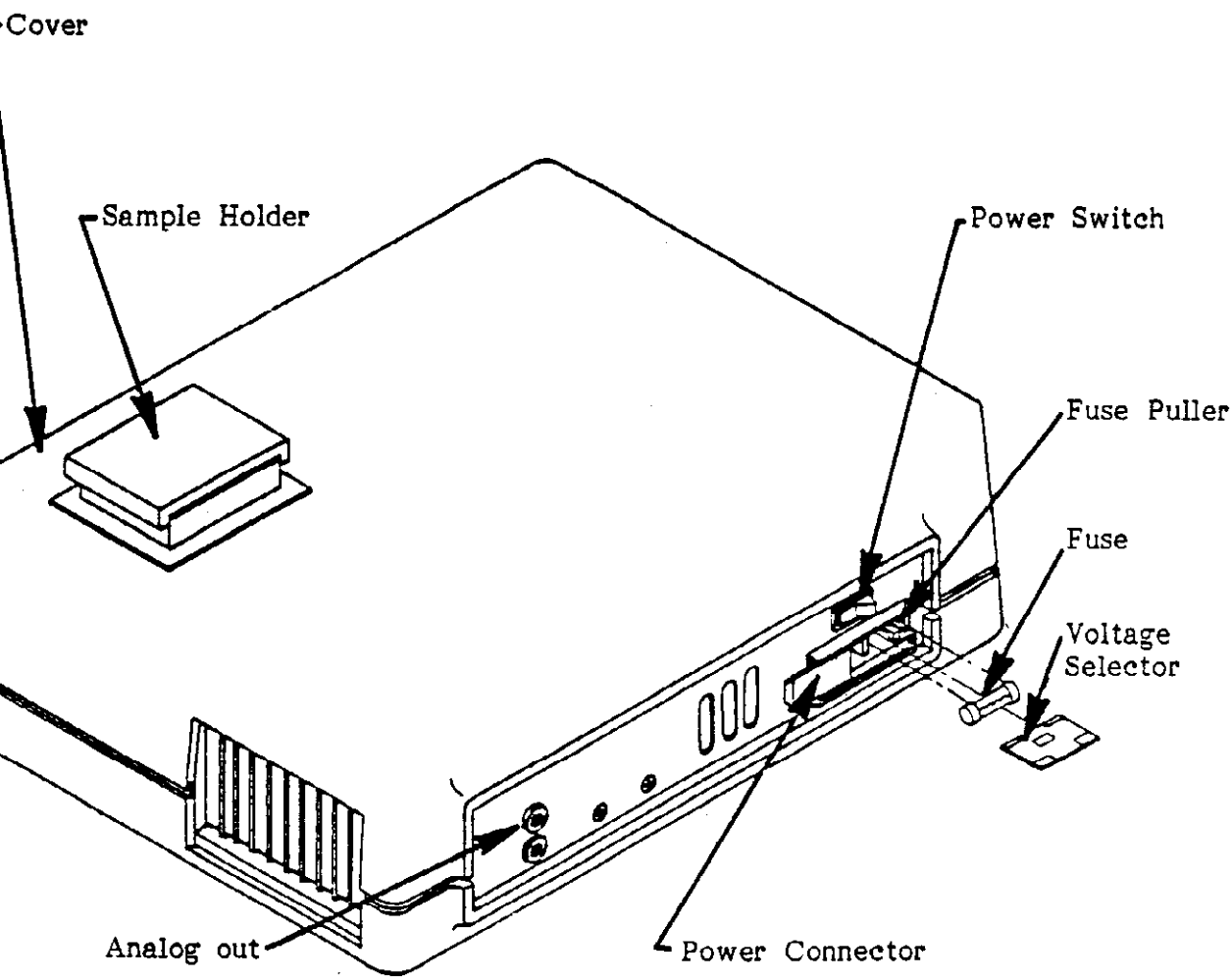

FIG 2-1, Back Panel, Model 450

SECTION 3

OPERATION

3-1 Description

Refer to FIG 3-1 and FIG 3-2 for location of the components.

A. Controls and Indicators:

1. **GAIN** - Turning clockwise to higher readings increases the gain of the instrument. Turn counter clockwise to decrease gain.

2. **ZERO** - Is used to set display to zero when the blank is placed in the sample compartment. The operator will normally blank out reagent background fluorescence before measuring samples.

3. **SPAN** - Is adjusted along with the **GAIN** switch to display the concentration of a standard.

4. **DISPLAY** - 3 1/2 digit display to indicate relative fluorescence.

B. Cuvette Holder:

5. The standard cuvette holder supplied with the instrument takes a 12mm by 75mm tube. To insert tube, lift cover from the front and insert tube until it reaches the bottom. Close cover. See your dealer for optional cuvette holders available for your 450.

C. Interchangeable Filter Holder:

6. To change the filter. lift lid and slide out filter holder. Replace with proper filter.

D. Aperture Slide:

7. May be used to reduce the sensitivity of the instrument if the sample fluorescence is too high.

3-2 Operation

Perform proper installation steps (see Section 2) before instrument is operated for the first time.

A. Turn on power switch (on back panel). Allow a 15 minute warm-up.

B. Place appropriate filters in sample compartment (see FIG 3-2).

C. Insert appropriate aperture slide if required.

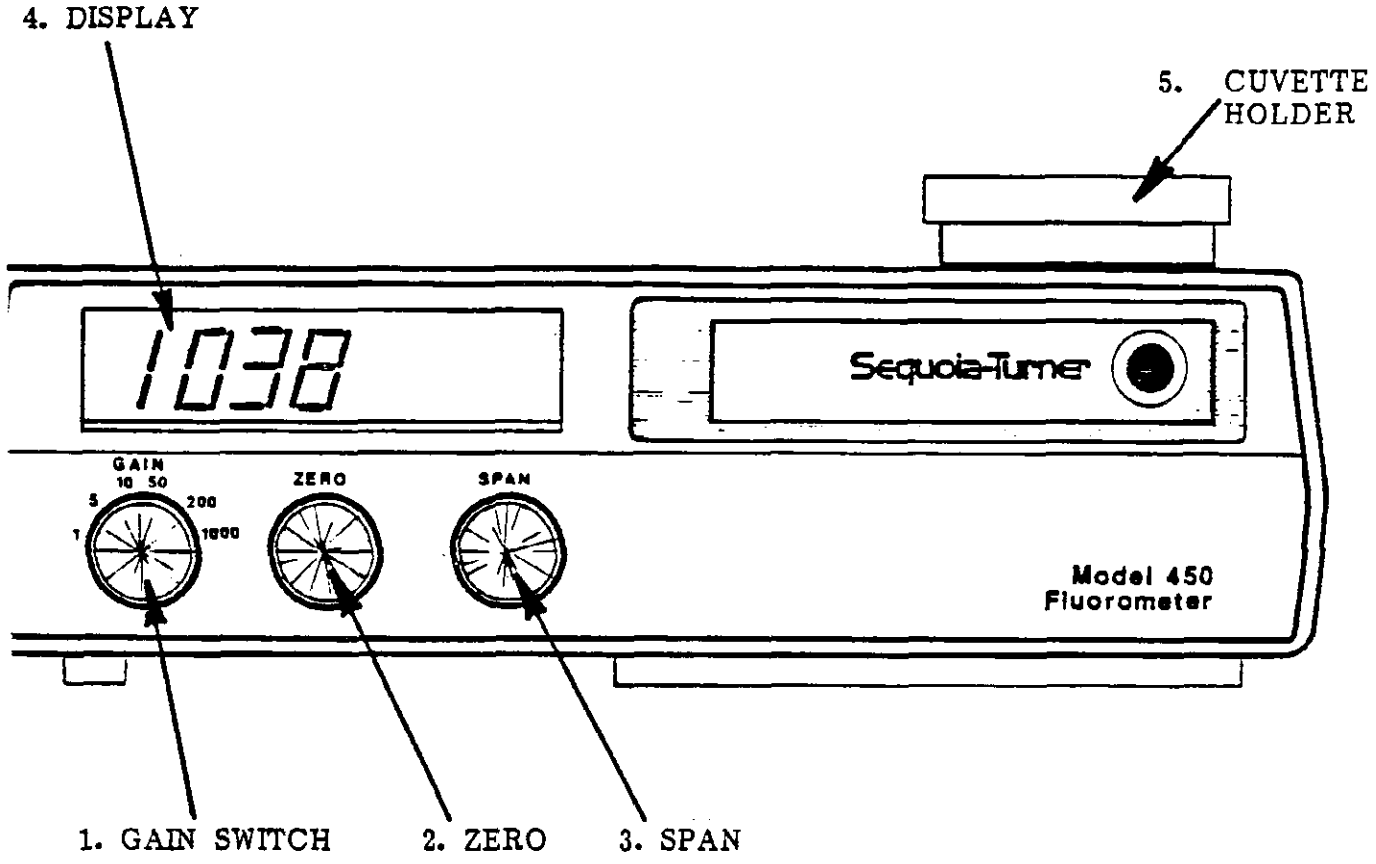

FIG 3-1 SEQUOIA-TURNER Model 450 Digital Fluorometer

D. Place cuvette with water or other blank solution into cuvette holder.

E. Set **SPAN** fully CW and adjust **ZERO** knob until display indicates **000.**

F. Replace blank solution with sample to be measured.

G. Adjust **GAIN** and **SPAN** controls until desired concentration reading is obtained on the display.

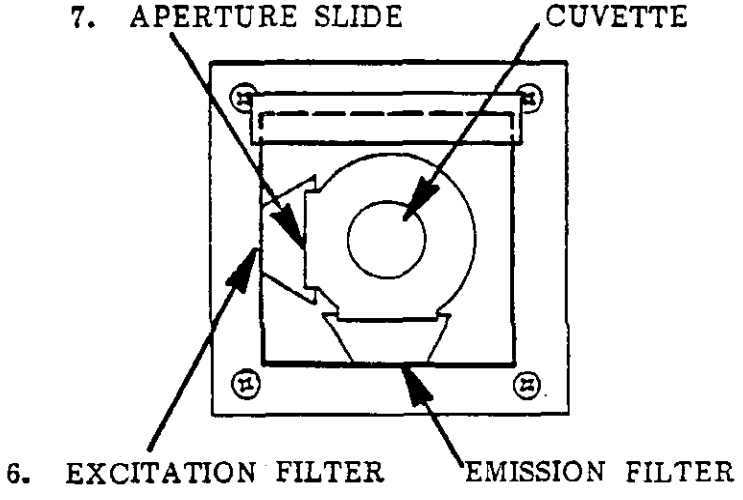

FIG 3-2 Sample Compartment

H. If display goes blank reduce GAIN until a number is displayed. If display remains blank on the lowest setting, install aperture slide.

3-3 Analog Output

External devices, such as data processing instruments or strip chart recorders, may be interfaced to the 450. Fluorometric analog output is on the rear panel (see FIG 2-1). The 0-200mv DC output is equivalent to the fluorescence of the sample. Connection is made to the 450 with standard bananna plugs. Observe the polarity as marked on the panel.

3-4 Cuvette Matching Procedure

Although cuvettes are not actually a part of a fluorometer, they are, nevertheless, important to the performance characteristics of the instrument. The cuvettes for any given determination should be matched so that they appear identical to the instrument.

Cuvettes may be matched as follows:

1. Install the excitation and emission filters for the appropriate analytical procedure. (Usually cuvettes are matched for use with a specific analysis.)

2. Fill each cuvette to be checked with the fluorescent substance to be analyzed.

3. Set zero fluorescence with the blanking cuvette, and then observe the fluorescence of each individual cuvette, which has been inserted into the cuvette holder and aligned according to the manufacturer's mark.

4. Observe the fluorescence for each cuvette and select those whose fluorescence agrees within ±1 fluorescence unit.

   NOTE: Unmarked round cuvettes require readout values at different points while rotating the cuvette. Fiducial marks may then be etched for alignment wherever best matched values are obtained.

3-5 Filter Selection

For nearly all fluorescence determinations, the required filters are recommended in the procedure. In the event that a new procedure is being developed, the following considerations should be applied in selecting the proper filters.

1. In fluorometry, compounds have the ability to discharge energy obtained when they absorb light, by re-emitting light of a longer wavelength. The efficiency of this process may be anywhere from a fraction of a percent to almost 100 percent. A selected portion of this light is measured.

2. The intensity of the light emitted is proportional to the amount of exciting light absorbed. At low concentrations, the emitted light may be considered proportional to the concentration. In practice, therefore, the meter reading of the fluorometer is linear with concentration of the fluorescent molecule involved. The range between the lowest detectable sample and the point where significant non-linearity occurs is normally a factor of 10^4 to 10^5 in concentration of the fluorescent molecule.

3. If a compound is fluorescent, a wide range of energy which it absorbs causes it to fluoresce. The spectrum of the emitted light is normally quite broad and its shape and peak are independent of the wavelength of the exciting light. The only variation is in intensity; where less light (energy) is absorbed, less light will be emitted. Proportionality of fluorescence and concentration are maintained even when the exciting light and measured fluroescence are far removed from the peaks.

   The choice of the excitation and emission wavelengths can markedly affect the sensitivity and specificity of a determination. The correct choice of filters minimizes the fluorescence of reagents (blank) and other compounds present while retaining high sensitivity for the compound of interest. The choice of filters is thus an important decision.

Before outlining the specific steps involved in filter selection, several terms should be explained.

Interference Filter - This filter has the narrowest passband of the filters and is required where the excitation and emission wavelengths are close together. Typical bandwidths are in the 8 to 10 nm region. They require precision manufacturing techniques and cost more than the other types of filters.

Narrow Pass Filter - This type of filter is made from special optical glasses and has bandwidths of 50 to 100 nm. Typically used for excitation filters.

Sharp-Cut Filter - This type of filter passes all light of longer wavelengths than a given value and blocks all light of shorter wavelengths. The transition from zero to full transmittance (approximately 80-90 percent) usually takes place over a region of about 40 nm. The characteristic wavelength of a Sharp-Cut Filter is defined as the wavelength at which transmittance is 37 percent. With most filter manufacturers, there is about a 10 nm tolerance in the location of the "cut." When using Sharp-Cut Filters, the characteristics of the photomultiplier set the longest wavelengths of emitted light which can be measured. The photomultiplier in the Model 450 is sensitive to wavelengths up to 700 nm but falls off very rapidly above 650 nm.

Compatibility of Filters

Two filters are compatible and may be used as excitation and emission filters if the wavelengths of the light they transmit do not overlap significantly. If such an overlap is present, scattered light from even slight turbidity of the sample or from an optical defect in the cuvette will reach the photomultiplier and be registered as fluorescence.

The steps involved in selecting the best combination of excitation and emission filters for a given compound are as follows:

1. Ideally the fluorescence spectra of the compound will be available. Look for the excitation and emission filters required in Table I.

2. If the fluorescence spectra are not available, then proceed as follows:

   a) Determine the maximum absorbtion wavelength of the compound with a spectrophotometer. Choose a filter which is closest to the peak from Table I and use this for excitation.

b) Having chosen a tentative excitation filter, it requires but a few minutes to turn through a series of Sharp-Cut emission filters compatible with the primary filter, comparing the ratio of sample reading to reagent blank. If the data thus obtained indicates a fairly sharp-peaked emission curve, the possibility of using a Narrow Pass Emission Filter may be considered. Usually there is little advantage to a Narrow Pass Emission Filter, though they are occasionally of value where the emission peak falls at a wavelength shorter than 500 nm.

TABLE I, Filter Selection Chart

All filters are mounted in filter holders specifically designed for simple wavelength selection in the Model 450. With the exception of the NB360 (40nm), all narrow band filters are three cavity interference filters with 10nm nominal bandwidth. The sharp cut filters are designated by the wavelength at which they exhibit a transmission of 37%. They typically have a transmission of less than 1% at 10nm less than the rated wavelength and a transmission of greater than 80% at a wavelength 10nm greater than the rated wavelength. The excitation filters may be used as emission filters where wavelengths are close together but sensitivity will be reduced.

450-101	Filter NB360, Narrow band excitation filter, 360nm peak
450-102	Filter NB390, Narrow band excitation filter, 390nm peak
450-103	Filter NB405, Narrow band excitation filter, 405nm peak
450-104	Filter NB420, Narrow band excitation filter, 420nm peak
450-105	Filter NB440, Narrow band excitation filter, 440nm peak
450-106	Filter NB460, Narrow band excitation filter, 460nm peak
450-107	Filter NB490, Narrow band excitation filter, 490nm peak
450-108	Filter NB520, Narrow band excitation filter, 520nm peak
450-109	Filter NB540, Narrow band excitation filter, 540nm peak
450-110	Filter NB450, Narrow band excitation filter, 450nm peak
450-121	Filter SC415, Sharp cut emission filter, transmits >415nm
450-122	Filter SC430, Sharp cut emission filter, transmits >430nm
450-123	Filter SC450, Sharp cut emission filter, transmits >450nm
450-124	Filter SC475, Sharp cut emission filter, transmits >475nm
450-125	Filter SC500, Sharp cut emission filter, transmits >500nm
450-126	Filter SC515, Sharp cut emission filter, transmits >515nm
450-127	Filter SC535, Sharp cut emission filter, transmits >535nm
450-128	Filter SC550, Sharp cut emission filter, transmits >550nm
450-129	Filter SC585, Sharp cut emission filter, transmits >585nm
450-130	Filter SC605, Sharp cut emission filter, transmits >605nm
450-131	Filter SC635, Sharp cut emission filter, transmits >635nm
450-132	Filter SC665, Sharp cut emission filter, transmits >665nm
450-151	Application Set, Fluorescein, NB490 & SC515
450-152	Application Set, Quinine Sulfate, Petroleum (heavy), NB360 & SC415
450-153	Application Set, Chlorophyll, NB440 & SC665
450-154	Application Set, Thiamine (Vitamin B_1), NB360 & SC430
450-155	Application Set, Riboflavin (Vitamin B_2), NB440 & SC535
450-156	Application Set, Tocopherols (Vitamin E), NB360 & SC515
450-157	Application Set, DNA (DABA method), NB405 & SC500
450-158	Application Set, Catecholamines, NB405 & SC515
450-159	Application Set, Rhodamine, NB540 & SC585
450-160	Application Set, Ames™ TDA, NB405 & NB450
450-161	Application Set, Protoporphyrin, NB405 & SC585

SECTION 4

PREVENTIVE MAINTENANCE

4-1 General

The 450 has been designed with the same reliability inherent in previous TURNER fluorometers while incorporating modern solid state electronics. It requires minimal preventive maintenance and only the care one would give any quality instrument. It should be kept clean and out of dusty areas or those with temperature and humidity extremes.

4-2 Fuse Replacement

The fuse is mounted in a holder which prevents access unless the power cable is removed. First turn off instrument and then remove cable from power outlet.

A. Remove power cable from back of instrument.

B. Slide plastic cover to left exposing fuse holder.

C. Locate black lever marked **FUSE PULL.** Swing lever out and to the left.

D. The fuse can now be removed.

E. Replace the fuse only with the proper type. If voltage is changed refer to installation instructions (section 2-3).

* 2.0 Amp for 100 and 120 VAC applications
* 1.0 Amp for 220 and 240 VAC applications

F. Insert fuse and push lever back into place.

G. Slide cover to right and replace power cord in instrument and then into power outlet.

4-3 Cover Removal

A. Turn off instrument and remove the power cable.

B. Using the Allen wrench, remove two screws in lid of the cuvette holder and remove lid.

C. Turn the instrument over and remove the five recessed screws holding the cover in place.

D. Turn the instrument right side up and lift off the cover.

E. Reverse the above steps to replace cover.

4-4 Lamp Replacement

A. Turn the instrument off.

B. Follow the instructions for cover removal (see section 4-3).

C. Locate lamp in black lamp housing. Using phillips screwdriver, remove two small screws holding lamp in place.

D. Remove lamp and disconnect two wires from board.

E. Clean the new lamp (Sequoia-Turner part number 450-201) with lens tissue and acetone.

F. Install the new lamp, replace the screws and connect the two leads to the board. The lamp is pre-aligned and requires no further alignment.

G. Replace the cover.

4-5 Voltage Selection

See section 2-3 in the installation procedure.

SECTION 5

TROUBLESHOOTING

5-1 General

Other than the lamp, the 450 has no user replaceable or adjustable components inside the cover. If steps below do not solve problem, contact your dealer's service representative.

5-2 Troubleshooting

*** Front panel does not illuminate -**

1. Turn power off.
2. Remove power cord from instrument and main power line.
3. Remove and inspect fuse (see Section 4-2). Replace if necessary.
4. Reinsert power cord firmly to ensure proper contact.
5. Turn instrument on and verify proper operation.

*** Front panel illuminates, source lamp does not -**

1. Replace lamp (see Section 4-4).

*** Front panel and source illuminate, display will not change -**

1. Perform installation procedure (see Section 2-3) and operation procedure (see Section 3-2).

Appendix A

LIMITATIONS

Blank Fluorescence

One of the most common limits on sensitivity is set by blank fluorescence, that fluorescence arising from the reagents or other sources separate from the compound of interest. Ideally, the fluorescence of the "blank" should be small, relative to the fluorescence of the material being analyzed.

Reagents

Usually, little difficulty will be encountered with commercially available reagent-grade chemicals. (This is particularly true in laboratories utilizing procedures where the majority of assays are done with visible light activiting the fluorescence of the sample.)

If the samples are under ultraviolet excitation or at high instrument sensitivity, then high "reagent blank" fluorescence may be encountered. Even spectro-quality solvents sometimes contain traces of impurities which may fluoresce under ultraviolet light. Simple distillation in an all-glass apparatus frequently remedies this problem. There are also several companies marketing fluorescent-grade reagents for those who must work at very low concentration.

A frequent source of contaminants are the plasticizers in some plastics and rubber. For dispensing distilled water, an all polyethylene or glass system is recommended. Water standing in rubber tubing may develop high fluorescence with the general purpose of shorter wavelength filters.

Standards

Standards should always be stored as concentrated solutions. Dilutions to working concentrations should always be prepared as required using appropriate diluents since fluorescence is usually pH dependent.

Glassware

Polyethylene or borosilicate glassware is recommended for general storage of reagents. Test tubes or flasks may be capped with parafilm for mixing and storage.

For work at very low levels of fluorescence, it may be necessary to rinse all glassware with an appropriate solvent.

Temperature

Fluorescence is usually more temperature sensitive than absorption. Although not all fluorescent materials exhibit marked sensitivity, there are instances where as much as a 2 percent reduction in fluorescence is observed for every degree centigrade temperature rise. Standards, reagent blanks, and samples should be at the same temperature prior to measurement of fluorescence.

Miscellaneous

Some materials are photosensitive; that is, they decompose when exposed to wavelengths they absorb. This property can be determined by simply inserting a solution into the instrument and observing its change in fluorescence over a period of time.

A few materials exhibit delayed fluorescence. This property can be verified by placing the solution in the instrument and observing a rise in the fluorescence reading after a period of time. See Appendix B for a more detailed explanation of fluorescence.

APPENDIX B

Theory of Fluorescence

When a molecule absorbs radiation, its energy level is increased. If part of this energy is converted to vibrational energy, the remainder, if radiated within 10^{-8} seconds, is emitted as light of lower energy (longer wavelength) than the absorbed energy. This property is called fluorescence. Atoms or molecules which fluoresce have well-defined excitation and emission spectra which allow both qualitative and quantitative analysis of the material.

The shape of the excitation spectrum is that of the absorbance curve of the molecule and is independent of the wavelength at which fluorescence is measured. Each molecule also has a characteristic number called the quantum efficiency, which is the ratio of total emitted light to total absorbed ligh. A non-fluorescent molecule is one whose quantum efficiency is zero or so close to zero that the fluorescence is not measurable. Both the quantum efficiency and the shape of the emission spectrum are independent of the wavelength of the exciting light. If the exciting light used is of a wavelength which is different from that of the absorption peak, a smaller portion of the light will be absorbed and proportionately less light will be emitted - illustrating the constancy of the quantum efficiency. However, the shape and location of the emission spectrum will not change.

Fluorescence/Concentration Relationships

Fluorescence if related to and dependent on concentration according to the following equation:

$F = KI_e \phi CD$

F = Fluorescence reading observed on the instrument.

K = A constant which accounts for instrumental factors.

I = The intensity of the exciting light at a wavelength.

C = The concentration of the fluorescing molecule.

e = The molar absorptivity of the fluorescing molecule.

D = The path length of the solution or solid being measured.

ϕ = The quantum efficiency of the molecule.

An examination of this equation shows that for a given molecule, at a constant concentration, the amount of fluorescence observed can be affected by:

I, the intensity of the exciting wavelength, and
D, the pathlength of the molecules

Therefore, as the concentration of a molecule decreases, the observed fluorescence can be kept constant by increasing the intensity of the excitating wavelength and/or the pathlength.

As a practical matter, this means that the only limits on the sensitivity of fluorescence measurements are the electrical noise in the instrument, competing radiations, physical limitations, i.e., sample volume available, maximum energy available, and maximum acceptable cell size.

The accuracy of measurement is excellent because of the technique in which a direct measure of radiant energy is being made.