IMPORTANT NOTICE: A printed copy of this document may not be the version currently in effect. The current official version is available via the Sandia National Laboratories Nuclear Waste Management Online Documents web site.

SANDIA NATIONAL LABORATORIES

YUCCA MOUNTAIN SITE CHARACTERIZATION PROJECT

TECHNICAL PROCEDURE

TP-245

Calibration, Preparation, Installation, and Operation of Vibrating Wire Rock Bolt Load Cells

Author: *Original signed by R.S. Taylor* Date: 4/20/99
Principal Investigator

Approved: *Original signed by C. Lum* Date: 4/20/99
Independent Technical Review

Concurrence: *Original signed by J.F. Graff* Date: 5/4/99
Quality Assurance

Effective Date: 5/10/99

REVISION HISTORY

Rev.	Summary of Changes
00	Initial Issue
01	Minor editorial corrections and update to current requirements.
02	Deletion of unnecessary text.

TABLE OF CONTENTS

Section **Page**

1.0 Scope 3
2.0 Activity Objective 3
3.0 Responsibilities 3
4.0 Qualification Prerequisites 3
5.0 Procedure 4
5.1 Verifying RBLC and DAS Calibration Documentation 4
5.2 Preparing RBLC for Installation 4
5.3 Installing RBLC 6
5.4 Collecting Data 7
5.5 Data Reduction 8
6.0 Records 9
7.0 References 9
8.0 Appendices 9

1.0 SCOPE

Sandia National Laboratories (SNL) is responsible for field experiments to monitor and characterize activities in the Exploratory Studies Facility (ESF) in the subsurface based testing programs in support of the Yucca Mountain Site Characterization Project (YMP). These experiments consist of installing and monitoring instrumentation that measures the long term in situ stability of rock units penetrated by ESF excavation. Rock bolt tension in the excavation is one of the parameters used to monitor stability and is measured using rock bolt load cells (RBLCs).

This Technical Procedure (TP) applies to all YMP SNL personnel and contractors who will be trained and qualified to calibrate, prepare, install, and operate RBLCs. Load values from the RBLC are the final result of operation as defined in this TP. Data reduction beyond conversion of signal output to load is not within the scope of this TP. In addition, measurement correction for electrical and environmental variations, such as thermal changes, also surpass this TP's scope.

2.0 ACTIVITY OBJECTIVE

The objective of the activities described in this TP is to define the methods used to control and document RBLC calibration, preparation, installation, and operation for the YMP.

3.0 RESPONSIBILITIES

The Principal Investigator (PI) has responsibility for ensuring that all information obtained follows this TP and that all individuals calibrating, preparing, installing, and operating RBLCs are properly trained.

Training will be conducted and documented by the PI or their designated representative for this particular procedure.

4.0 QUALIFICATION PREREQUISITES

The PI responsible for the activities described in this procedure verifies that the following prerequisites have been met:

- Read this TP and meet the proficiency requirements by demonstration to the PI or a previously qualified technician.
- The current version of this TP is being used.
- Equipment has a current calibration, if applicable.

Training will be documented on a training log maintained by the PI.

5.0 PROCEDURE

Rock bolt tension in the excavation is one of the parameters used to monitor stability of the ESF excavation and is measured using rock bolt load cells (RBLCs). The RBLC and its associated data acquisition system (DAS) are the equipment necessary to perform field measurements. Equipment specified include a RBLC (Geokon 4900 Series RBLC or similar model) and a DAS (Geokon GK-401, GK-403 or similar model).

The Geokon 4900 series RBLC consists of a cylinder of high-strength, heat treated steel with 3 to 6 vibrating wire strain gages located around the circumference of the cell. Load applied to the cell is measured by the vibrating wire strain gages and the readings averaged to minimize the effects of uneven and eccentric loading. Field installation of an RBLC is shown in Figure 5.1. The five steps required for obtaining rock bolt tension data from RBLCs include:

- verifying RBLC calibration documentation,
- preparing RBLC for installation,
- installing RBLC,
- collecting data, and
- data reduction.

These five steps must be followed in sequence to prepare for and to monitor changes in tension that occur in rock bolts over an extended period of time.

5.1 Verifying RBLC and DAS Calibration Documentation

Documentation of the RBLC and DAS calibration is maintained per the requirements of TP-246, "Control of Measuring and Test Equipment Used in the ESF." The Geokon GK-401 and GK-403 require annual calibration. The Geokon 4900 series RBLCs are calibrated by the manufacturer.

Calibration documentation for each RBLC will be verified prior to installation. Copies of the vendor prequalification including documentation of their calibrations and their calibration quality control program are included in the SNL procurement documents as required by the SNL QAIP 4-1, "Procurement Documentation Requirements." Additional documentation placed in the calibration records file include copies of each RBLC's calibration certificate with serial number and calibration curve.

The person verifying the RBLC calibration documentation will document this activity by signing and dating the appropriate item on the RBLC Installation Form (Appendix 1).

5.2 Preparing RBLC for Installation

Preparation of each RBLC for transportation and installation in the tunnel will include completion of the appropriate items on the RBLC Installation Form (Appendix 1). These items will include:

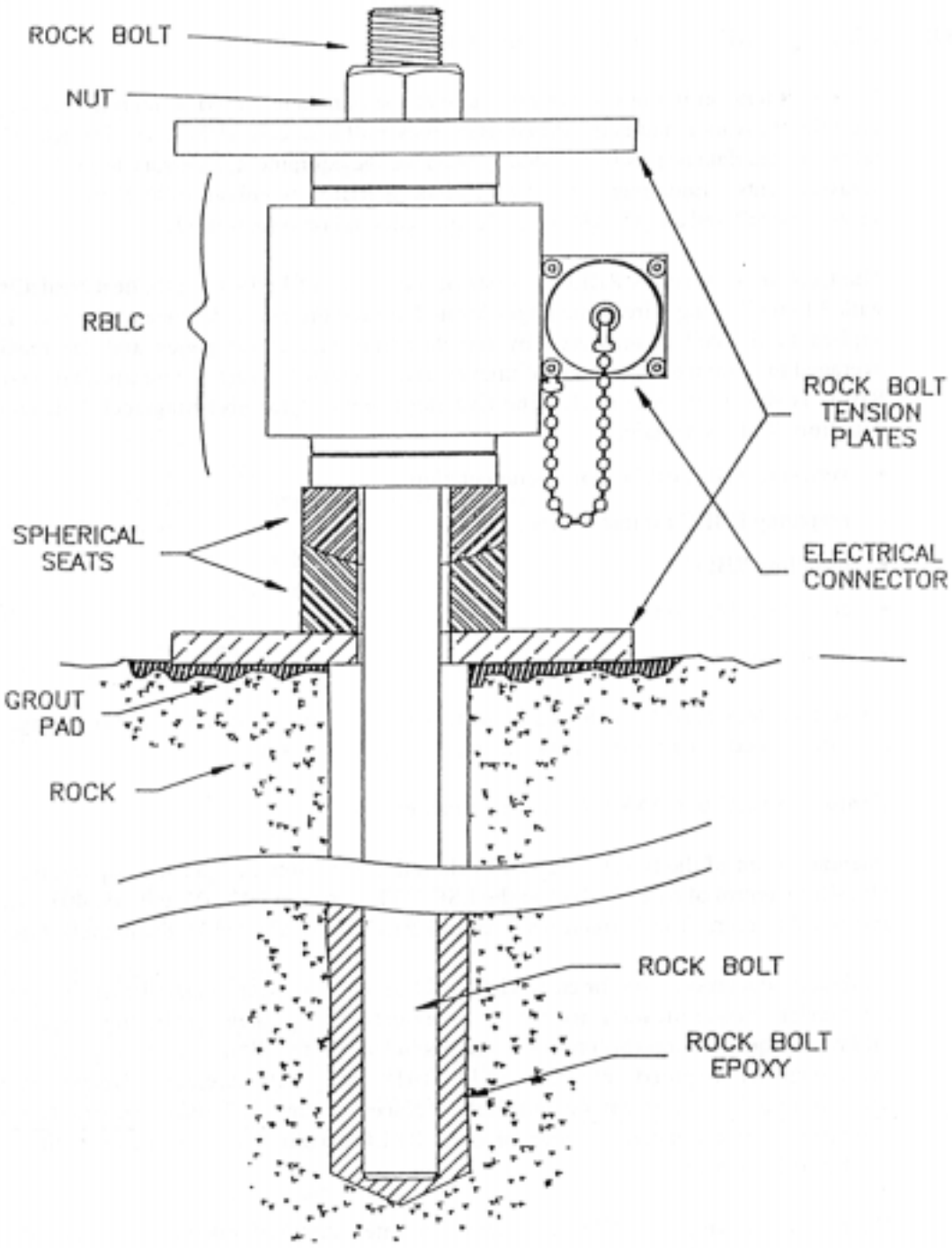

Figure 5.1 Field Installation of RBLC

1. Identification. The manufacturer, model, type, serial number and identification number will be recorded on the RBLC Installation Form.
2. Inspection. Visually inspect the RBLC and associated cable for defects. Replace any defective RBLCs or cables and repeat the inspection. Record inspection on the RBLC Installation Form.

Before installing the RBLC it should be checked by connecting it to the DAS and taking initial zero load readings. These readings should be taken at ambient temperature and be recorded in the calibration records file. Transient changes in temperature can lead to erroneous readings, and for this reason the cell should be allowed to come to ambient temperature. The ambient temperature should be recorded in the calibration records file.

The initial readings when averaged should coincide very closely with the initial readings shown on the calibration curves after corrections for temperature. This initial zero load reading is very important because it is against this reading that all subsequent readings will be compared. The person preparing the RBLC for installation will document this activity by signing and dating the appropriate item on the RBLC Installation Form.

5.3 Installing RBLC

The RBLCs are installed on selected rock bolts during installation of the support system (Figure 5.1). RBLCs should be installed between flat bearing surfaces which are parallel to each other and normal to the axis of the RBLC. The load should be centralized with respect to the axis of the RBLC. If the surface is not parallel then spherical seatings or wedges should be employed or compensation washers made of copper, high density plastic or some similar deformable material. Care should be taken to ensure that spherical seatings are correctly positioned and lubricated. Centralization can be accomplished by use of bushings to fill the annular space between the rock bolt and the load cell.

Route the cable so that the plug is positioned at some convenient location for readout.

Shield the cable from possible damage from flyrock or traffic by tucking it away behind structural members, if possible. Where the cable is exposed it may require additional protection by fixing steel channels or angles over it.

<u>NOTE: Do not lift the RBLC by the cable.</u>

Bolts that have been instrumented should be clearly and permanently numbered and painted for ease of recognition. Information to be documented on the RBLC Installation Form (Appendix 1) and RBLC Data Sheet (Appendix 2) include:

1. Rock bolt physical specification(s), including bolt type, length, diameter, and the anchor type and installation torque.
2. Rock bolt location(s), orientation(s), and depth(s).
3. RBLC identification data will include instrument manufacturer, model, type, serial/ID number.

4. Date, time, and person documenting the information.
5. Comments regarding the installation conditions.

The person installing the RBLCs will document this activity by signing and dating the appropriate item on the RBLC Installation Form (Appendix 1).

5.4 Collecting Data

Data will be collected by connecting the RBLC to a DAS (Geokon GK-401, GK-403 or similar model). The GK-401 and GK-403 Readout Box provide the necessary excitation and signal conditioning for reading the Geokon 4900 series RBLC. To take readings the box is connected to the RBLC through a switch by jumper or directly by the readout box. Readings in units of f^2 (frequency squared) are taken in position "B" with the switch selector at the desired gage number. When switching from one position to the next, allow a few seconds per position to check each reading. The readout box excites and reads the gage once per second and updates only when the reading changes. The readout box will automatically turn itself off after about 4 minutes to conserve power.

The GK-403 provides additional features over the GK-401. It can read, display and store both temperature and load in Engineering Units, along with the time and temperature. When used in conjunction with the Geokon 4900 series RBLC, the output of all 3 or 6 sensors within the RBLC, is summed and averaged then displayed on the GK-403.

The RBLC installation, the RBLC, and Readout Box location, identification, and description information and readings data will be documented on the RBLC Data Sheet (Appendix 2). This information will include:

1. RBLC installation;
   - location and orientation,
   - bolt type, length, and diameter,
   - anchor depth and installation torque, and
   - borehole diameter.
2. RBLC
   - manufacturer, model number and serial number, and
   - calibration factor.
3. Readout Box - manufacturer, model number, recalibration date, and serial number.
4. Reading Data - date, time, person recording data, readings, and comments.
5. Ensure that all data from the previous RBLC activities are available during operation.

5.5 Data Reduction

The readout box excites the gage and times the period of 255 cycles (or less) of gage vibration to a resolution of better than 0.1 microseconds. In gage position "B," which is used for RBLCs, the processor converts the period readings to units of f^2 (frequency squared) which is directly proportional to wire strain and applied load.

A typical average zero load reading of 6400 is equal to $f^2 \times 10^{-3}$, and to obtain load at any given time the following equation applies:

$$L = \sum_{1}^{N} (R_0 - R_1) G$$

Where: R_0 = initial reading (calculated zero from calibration linear regression)
R_1 = subsequent reading at load
N = number of sensors being read
G = gage factor, lbs./digit (average)
L = load, lbs.

Note that all load determinations are based on the changes of all gage readings. If an individual gage is seen to fluctuate or for some reason fails, the remaining active gages will still give very reliable results.

Because of slight differences in the thermal coefficient of expansion between the gage wire and load cell body material, the cell is slightly effected by changes in ambient temperature. The effect is very predictable and corrections can be made. The following applies:

$$L_T = \sum_{1}^{N} (R_0 - R_1) G + C(T_0 - T_1)$$

Where: C = temperature correction factor supplied with RBLCs
T_0 = temperature at zero load (initial reading), °C
T_1 = temperature at subsequent reading, °C
L_T = load, lbs.

Since the purpose of the RBLC installation is to monitor site conditions, factors such as blasting, traffic, temperature, changes in personnel, and nearby activities should be recorded on the RBLC Data Sheet (Appendix 2).

For a given RBLC, the cell number, calibration factor, and calculated zero value are to be documented to support data reduction. These values come from calibration data provided by the manufacturer. For each reading, the following information is recorded and entered into the spreadsheet:

- Date,
- time,
- three readings, and

- comments.

6.0 RECORDS

Records and record packages, including corrections and changes thereto, generated as a result of implementing this procedure will be prepared and submitted as lifetime QA records (QA:L) by the record source in accordance with QAIP 17-1 and QAIP 17-2.

QA records generated in following this TP include:

1. RBLC Installation Forms
2. RBLC Data Sheets
3. Documentation of proficiency training

7.0 REFERENCES

QAIP 12-1, “Measuring and Testing Equipment Control,” Sandia National Laboratories, Albuquerque, NM.

QAIP 17-1, “Creating, Protecting, and Processing CRWM Records,” Sandia National Laboratories, Albuquerque, NM.

QAIP 17-2, “Processing of Technical Data on the Yucca Mountain Site Characterization Project,” Sandia National Laboratories, Albuquerque, NM.

8.0 APPENDICES

Appendix 1. Rock Bolt Load Cell Installation Form (1 page)

Appendix 2. Rock Bolt Load Cell Data Sheet (1 page)

RBLC Installation Form

INSTRUMENT: _____
Manufacturer **Model** **Type**

SERIAL NUMBER: _____ **ID NUMBER:** _____

	PERSONNEL	SIGNATURE	DATE
1. IDENTIFICATION	_____	_____	_____
2. INSPECTION	_____	_____	_____
3. CALIBRAITON DOCUMENTATION VERIFICATION	_____	_____	_____
4. PREPARATION	_____	_____	_____
5. INSTALLATION	_____	_____	_____

COMMENTS (with initials and dates):

Rock Bolt Load Cell Data Sheet

Project_____

Test Location _____

Orientation_____

Bolt

Type_____

Length _____

Diameter _____

Anchor

Depth _____

Install Torque _____

Load Cell

Description _____

Serial Number _____

Calibration_____

Borehole Diameter_____

Grout _____

Readout Box No.	Date	Time	By	Readings				Delta (N-1)	Load (lbs)	Comments
				1	2	3	Sum			
SNL #__										